Installation Manual for Outdoor Unit

No.0010573317
F

- Please read this manual carefully before using
- Keep this operation manual for future reference

Contents

Parts and Functions ---------- 1

Safety Precautions ---------- 2-4

Installation Drawing of Outdoor Unit ---------- 5

Tools Necessary ---------- 6

Installation Instruction ---------- 7

Installation Procedures ---------- 8-16

Operation and Performance ---------- 17

Others and Test Run ---------- 18-21

Malfunction ---------- 22-24

splitoff.ru

Большая библиотека технической документации
http://splitoff.ru/tehn-doc.html
каталоги, инструкции, сервисные мануалы, схемы.

Parts and Functions

AU242FHBHA
AU242FHBIA
AU282FHAIA
AU282FHAHA
AU342FHAIA

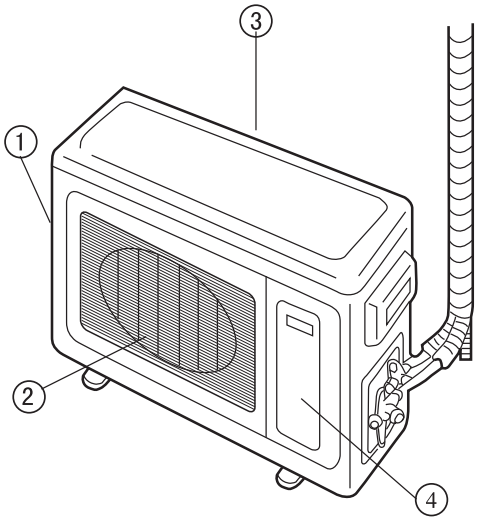

① Air inlet
② Air outlet
③ Air inlet
④ Service panel

AU482FIAIA
AU482FIBIA
AU482FIBHA
AU522FIAIA
AU522FIAKA

AU48NFIAIA
AU48NFIBIA
AU48NFIBJA
AU52NFIAKA
AU55NFIAIA
AU60NFIAKA

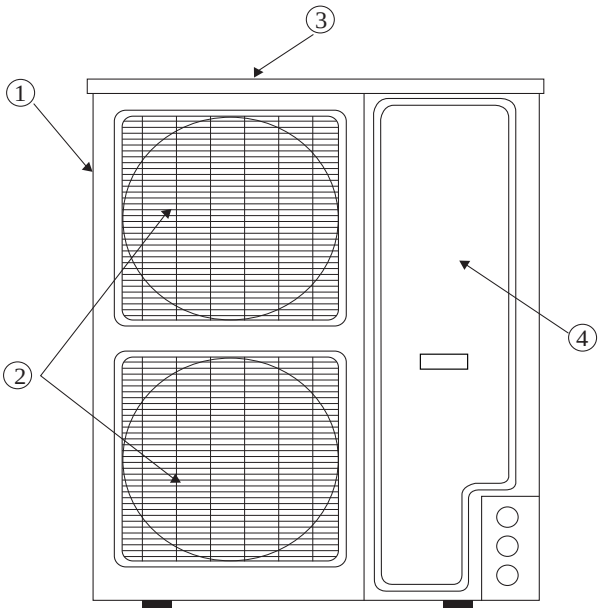

① Air inlet
② Air outlet
③ Air inlet
④ Service panel

Cautions:
Please cut off power supply of the outdoor unit when don't use the air conditioner for a long time.

Все каталоги и инструкции здесь: http://splitoff.ru/tehn-doc.html

Safety Precautions

Read carefully this "SAFETY PRECAUTIONS" to ensure a proper operation of the system.

There are four kinds of precautions and suggestions as follows:

⚠ Warning:An improper handing could lead to grave result like a death, serious injury, etc.

⚠ Caution:An improper handing could lead to injury or malfunction; a very serious problem could occur dependingon situatio

Contents with "Inhibition" is strictly prohibited. It could lead to system damage or endanger personal safety.

⃠ Explannation :These contents can insure the proper use of the system.

Make sure to follow the following important safety precautions.
Keep it always at hang for read consultation.
If the operator is replaced, make sure to hand over this manual to the new operator.

⚠ WARNING

- Please cut off power supply immediately when anyabnormity occurs (for service personnel) to take to service personnel for handling.

  If continue using the air conditioner, it may cause unit damage, electric shocks or fire accident.

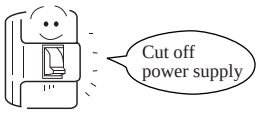

- When the system needs repairs, consult after service.

  Improper repair may leadto water leakage, electricshocks or fire.

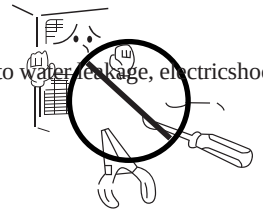

- Do not poke the air inlet, outlet or swing louver withyour finger or anything else.

  Since the internal fan is operating with a high speed,it could cause injuries.

- Consult after service personnel to take to avoid

  Refrigerant leakage reach a certain degree may causedeficiency of oxygen even refrigerant leakage occurs.

- When the air conditioner is relocated,Improper practice of insta

- Do not remove the outlet ofoutdoor unit. Exposure of thefan is v could cause injuries.

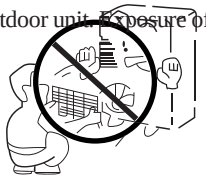

- After a long time using of air conditioner, check the foundation if any damage exists.

  If damaged foundation is notrepaired, unit falling may occur and cause injuries.

Все каталоги и инструкции здесь: http://splitoff.ru/tehn-doc.html

Safety Precautions

⚠ WARNING

- Neither stand on the air conditioner nor place something on it.

  There are risks of falling or injury by collapsed object.

- Do not operate the air conditioner with wet hands.

  It could cause electric shocks.

- Only use correct types of fuse.

  Do not replace fuses withwires or any other materials. It could cause malfunction or fire.

- Do not place or use inflammable liquid near the air conditioner. It could cause fire.

- Clean system only after stop operating and turn off the switch.

- Do not wash the air conditioner with water.

  It could cause electric shocks.

- Execute proper grounding.

  Ground wires should never connect to a gas pipe, city water pipe, lightning conductor rod or groundwire of the tel

- Drainpipe should be arranged to provide a positivedraining. If the pipe is arranged improperly, it could cause leakage.

- Do not install the air conditioner nearby the place where may have leakage of inflammable gas.

- It could cause fire if there is inflammable gas near the air conditioner.

- Install a circuit breaker.

  It could cause electric shocks without installing a circuit breaker.

Все каталоги и инструкции здесь: http://splitoff.ru/tehn-doc.html

Safety Precautions

The following instructions should be followed when installing your new refrigerant air conditioner.
This air conditioner uses environmentally friendly refrigerant (R407C).

1.R407C refrigerant requires a higher system pressure and is more likely to be affected by moisture, oxides and grease. If polyol ester is used, special care should be taken to avoid contamination from moisture, dust, refrigerant as well as refrigeration oil in the cooling system.

2.As R407C refrigerant is not an azeotropic compound, its components may change significantly if it is injected in a gaseous state. It is recommended that the refrigerant be injected in a liquid state.(20% of the refrigerant may remain in the bottle.)

3.To avoid contamination between refrigerant and refrigeration oil, tools specially designed for R407C and R22 refrigerants should be used.

4.Clean pipes should be used to connect to the piping system. Moisture and foreign bodies must be completely removed. Pipes provided for R22 system cannot be used.

5.Refrigerant leaks may result in changes to refrigerant property. If leaks occur, the system must be exhausted and refilled with R407C refrigerant.

6.The cooling system must be completely exhausted to 10Pa or less. Vacuuming can be conducted from the high pressure and low pressure side of the system.

7.Only parts specified by the manufacturer should be used to replace the compressor and the 4-way and shut-off valves.

List of Necessary Equipment and Requirements

Tools listed in this table should be used for installation. New tools and equipment specified below should be carefully maintained.

◎ : New (for R407 only)

△ :Original

Equipment	Application	Requirement
R407C refrigerant filler	For vacuuming and refrigerant filling	◎ New
Filling duct		◎ New
R22 refrigerant filler	Refrigerant filling	Not applied for new refrigerant
Leak detector	Detecting refrigerant leaks	◎ For new refrigerant and R134a
Vacuum pump	Vacuuming and drying	Applicable with anti-backflow device installed
Anti-backflow vacuum pump	Vacuuming and drying	△ Tools for R22 to be applied
Expander	Pipe expanding	△ Tools for R22 to be applied
Bender	Pipe bending	△ Tools for R22 to be applied
Refrigerant reclaimer	Refrigerant reclaiming	◎ For R407C only
Refrigeration oil (polyol ester)	Applied on flared section of pipes	◎ Lipid greases
Spanner	Tightening screws	△ Tools for R22 to be applied
Pipe cutter	Cutting pipes	△ Tools for R22 to be applied
Refrigerant bottle	Refrigerant filling	◎ For R407C only Label: On container top with refrigerant name
Welder and Nitrogen bottle	Pipe welding	△ Tools for R22 to be applied
Refrigerant electric balance	Refrigerant filling	△ Tools for R22 to be applied

Все каталоги и инструкции здесь: http://splitoff.ru/tehn-doc.html

Installation Drawing of Outdoor Unit

Maximal length and drop height permissible of refrigerant piping,please look page 10.

Following is an example:

Model: Outdoor unit AU482~522 type

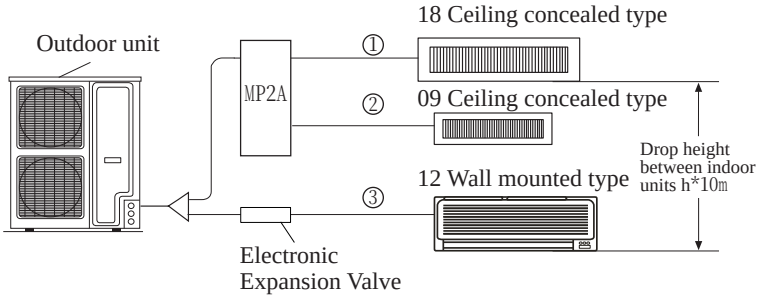

Piping / Position	Gas pipe	Liquid pipe
①	Ø15.88mm	Ø9.52mm
②	Ø9.52mm	Ø6.35mm
③	Ø12.7mm	Ø6.35mm

Following is an example:

Model: Outdoor unit AU48~60 type

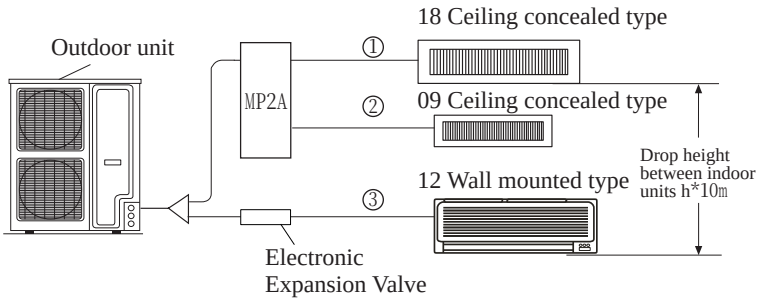

Piping / Position	Gas pipe	Liquid pipe
①	Ø15.88mm	Ø9.52mm
②	Ø9.52mm	Ø6.35mm
③	Ø12.7mm	Ø6.35mm

Following is an example:

Model: Outdoor unit AU242~342 type

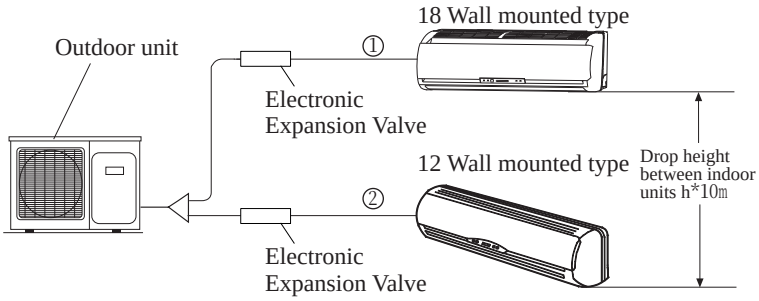

Piping / Position	Gas pipe	Liquid pipe
①	Ø15.88mm	Ø9.52mm
②	Ø12.7mm	Ø6.35mm

Notice:

1. Designed capacity when installing (total capacity of all the indoor unit connected to) *130% of rated capacity of outdoor unit
2. Total capacities of indoor units being used * 100% of rated capacity of outdoor unit.
3. After installing the cassette air conditioner, please paste the label (Accessories of the indoor unit) to the middle of the lower frame of air outlet.

Все каталоги и инструкции здесь: http://splitoff.ru/tehn-doc.html

Tools Necessary

Unit fixing Fix the installation bracket in the selected area according to the dimension as shown in the Fig. Then fix the outdoor unit to the installation bracket.

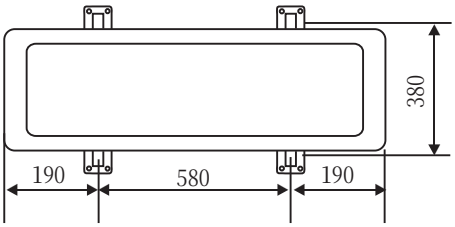

Installation dimension
of outdoor unit (mm)

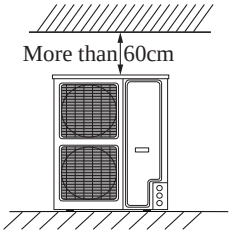

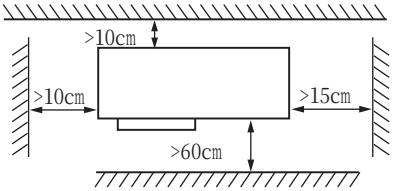

Installation Tools
1. Screw driver
2. Hacksaw
3. 70mm Dia. Hole core drill
4. Spanner [Dia. 17,27mm]
5. Spanner [Dia. 14,17,19,27mm]
6. Cutting tool
7. Flaring
8. Knife
9. Nipper
10. Gas leakage detector or soap water
11. Measuring tape
12. Reamer
13. Refrigerant oil
14. Vacuum pump
15. Nitrogen tanker

Standard accessories
Following parts shall be field supplied.

Shape and description	QTY	Remark
Rubber pad	4	
Big wire clamp	1	

MARK	PARTS NAME
A	Adhesive tape
B	Pipe clip
C	Connecting hose
D	Drain hose
E	Insulation material
F	Putty

Все каталоги и инструкции здесь: http://splitoff.ru/tehn-doc.html

Installation Instruction

- Please read these "Safety Precautions" first then accurately execute the installation work.
- Though the precautionary points indicated herein are divided under two headings, "WARNING ⚠" and "CAUTION ⚠", those points which are related to the strong possibility of an installation done in error resulting in death or serious injury are listed in the "WARNING" section. However, there is also a possibility of serious consequences in relationship to the points listed in the "CAUTION"section as well. In either case, important safety related information is indicated, so by all means, properly observe all that is mentioned,
- After completing the installation, along with confirming that no abnormalities were seen from the operation tests, please explain operating methods as well as maintenance methods to the user (customer) of this equipment, based on the owner's manual.
  Moreover, ask the customer to keep this sheet together with the owner's manual.

⚠ WARNING

- Installation by yourself or improper handing could cause such problems as water leakage, electric shock or fire accident.
- Execute the installation accurately, based on following the installation manual. Again, improper installations can result in water leakage, electric shocks and fires.
- For installation, confirm that the installation site can sufficiently support heavy weight. The air conditioner cannot be installed on non-special metal frames (Such as guard net against theft). When strength is insufficient, injury can result from a falling of the unit.Execute the prescribe installation construction to prepare for earthquakes and the strong winds of typhoons. Improper
- Take care that wiring does not rise upwards and keep the right shape. Properly ground the wiring and let it free from electric cover or outside plate. Its improper installation can also result in heat generation or fire.
- When setting up or moving the location of the air conditioner, do no mix air etc. or anything other than the designated refrigerant (R22 or R407C) within the refrigeration cycle.
- Rupture and injury caused by abnormal high pressure can result from such mixing.Always use accessory parts and authorized parts fo
  Do not lead the drainpipe to the waterspout that generates such harmful gas as sulphurous gas, which may enter indoors.
- If refrigerant leakage occurs during installation, ventilate at once. Harmful gas may produce if the refrigerant contacts fire.Make sure around the unit could result in an outbreak of fire.For the drainpipe, follow the installation manual to insure that it allows proper drain
-
-
-
-
-
-
-

⚠ CAUTION

- Grounding must be executed properly. No grounding or inadequate grounding could cause electric shock. Do not connect the ground wire to a gas pipe, water pipe, lightning rod or a telephone ground wire.
- A Circuit breaker must be installed. If not, it may cause electric shocks.
- Electrical leakage test is necessary after installation.

Все каталоги и инструкции здесь: http://splitoff.ru/tehn-doc.html

Installation Procedures

Selection of the installation place

Installation place		
Avoid install the air conditioner near the place where possibility of inflammable gas leakage exists.	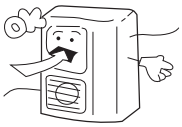 If some obstacles exit, it may cause capacity reduction or noise increase.	Install the air conditioner firmly on the foundation that can fully support the weight of the unit. 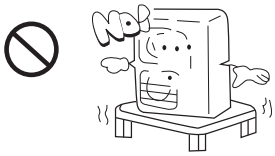
Select the place so as to not annoy neighbor with the hot/cold air or noise.	Snow protection work is necessary where outdoor unit is blocked up by snow.	
	It is advisable not to install the air conditioner at the following special place. It may cause malfunction; consult the sales dealer when you have to install the unit on such a place. ● The place where corrosive gas generates (Hot spring area etc.) ● The place where salt breeze blows (seaside etc.) ● The place dense soot smoke exists. ● The place where humidity is extraordinarily high. ● The place where near the machine which radiates the electromagnetic wave. ● The place where voltage variation is considerably large.	

Refrigerant piping connection

● During installation,if refrigerant leakage occurs,take ventilation measurement immediately. ● As soon as the leaked refrigerant gas meets fire, poisonous gas will generate.	● After finishing installation,confirm the refrigerant gas does not leak. ● If the refrigerant gas leaks in the room,once it meets heater,burner and gas stove etc.fire source,the poisonous gas will generate.

⚠ WARNING

During the operation, if refrigerant gas leakage exists, execute venting practice at once. Once refrigerant gas contacts fire, harmful gas will produce.Make sure no refrigerant gas leakage after installation. If refrigerant gas contacts fire from warmers

Connecting method

- Make the pipe as short as possible to ensure high efficiency.
- Apply refrigerant oil at half union and flare nut.
- Bend piping with as wide angle as possible to avoid pipe crash.
- When connecting pipe, hold the pipe center-to-center and screw nut on by hand, then tighten with two spanners. Refer the tighten moment in following table. As shown in Fig.
- Be careful not to let foreign matters, such as sands enter the pipe.

If tighten nut without pointing to center it could cause screw thread damage which could lead to gas leakage.

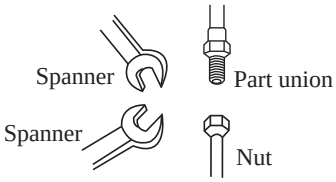

Все каталоги и инструкции здесь: http://splitoff.ru/tehn-doc.html

Piping operating precautions

1. When Using braze welding to connect the half union, inflate nitrogen to avoid pipe oxidation.2. Use new clean piping as refrig
3. When tightening and loosening connecting nuts, make sure to use two spanners simultaneously. Nuts cannot be tight enough with only one spanner.

Tightening moment of connecting nuts

Connecting piping diameter	Installation moment	Tightening moment
⌀ 6.35mm	11.8(1.2kgf.m)	13.7(1.4kgf.m)
⌀ 9.52mm	24.5(2.5kgf.m)	29.4(3.0kgf.m)
⌀ 12.70mm	49.0(5.0kgf.m)	53.9(5.5kgf.m)
⌀ 15.88mm	78.4(8.0kgf.m)	98.0(10.0kgf.m)
⌀ 19.05mm	98.0(10.0kgf.m)	117.7(12.0kgf.m)

Selection of piping materials and dimension

- Selection of the diameter of refrigerant piping (following *** refer to the illustrations)

*Piping from outdoor unit to the first branch piping (for short main piping hereinafter) Main piping should consist to the piping dimension of outdoor unit.

*Piping between branch pipes (for short branch piping hereinafter):
Choosing of the diameter of branch pipe is according to the total capacity of all indoor units. But if exceeding the capacity of outdoor unit, choosing is according the capacity of outdoor unit.

Model and capacity of indoor unit

Model	Capacity ($x10_2$ w)/($x10_3$BTU/h)	Model	Capacity ($x10_2$ w)/($x10_3$BTU/h)
07	18/7	18	50/18
09	25/9	21	60/21
12	32/12	24	71/24
14	40/14		

*Piping between branch pipes and indoor units (for short indoor pipe hereinbefore):
The piping should consist to the diameter of indoor unit piping. But during the first branch pipe, if the pipe length is longer than 30m,a larger scale of gas pipe diameter should be chosen.

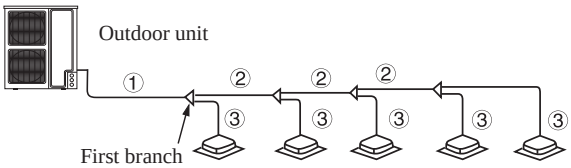

- Total capacity of all indoor units ≤ 9500W, Adopt FQG-B120 for Y type branch pipe.
  Total capacity of all indoor units 9500W*~ ≤17900W, Adopt FQG-B180 for Y type branch pipe.
  Total capacity of all indoor units >17900W,Adopt FQG-B370 for Y type branch pipe.

① Table1 Diameter of main piping [Inside ( ) is connecting way of outdoor unit]

AU242~282 type	AU60N type	Other type units
Gas piping	Gas piping	Gas piping
⌀ 15.88 (Screw thread)	⌀ 22.22 (Soft soldering)	⌀ 19.05(Screw thread)
Liquid piping	Liquid piping	Liquid piping
⌀ 9.52 (Screw thread)	⌀ 12.7(Screw thread)	⌀ 9.52 (Screw thread)

② Table2 Diameter of branch piping

Total capacity of indoor units ($x10_2$ W)/($x10_3$ BTU/h)	Gas piping	Liquid piping
*111/*38	⌀ 15.88	⌀ 9.52
111* ~ *182/38* ~ *62	⌀ 19.05	⌀ 9.52
*182/*62	⌀ 22.22	⌀ 12.7

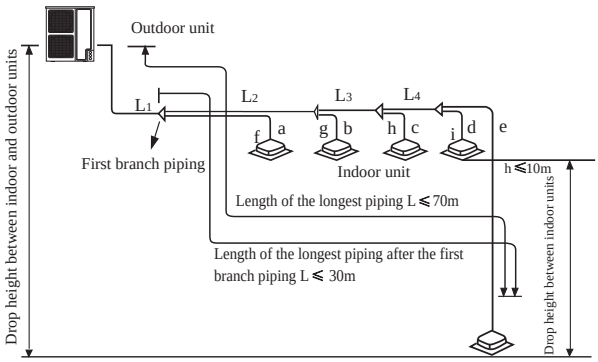

Все каталоги и инструкции здесь: http://splitoff.ru/tehn-doc.html

AU242~342 type: Maximal length and drop height permissible of refrigerant piping

			Permissible value	Piping part
Piping length	Total length of piping (actual length)		50m	$L_1+L_2+a+b+c$
	Longest piping L	Actual length	35m	L_1+L_2+c
	Piping length of indoor unit which is furthest to the first branch piping L（※）		15m	L_2+c
Drop height	Drop height between indoor and outdoor unit H	Up outdoor	30m	————
		Under outdoor	20m	————
	Drop height between indoor units h		10m	————

AU482~522 type and AU48~60 type: Maximal length and drop height permissible of refrigerant piping

			Permissible value	Piping part
Piping length	Total length of piping (actual length)		100m	$L_1+L_2+L_3+L_4+a+b+c+d+e$
	Longest piping L	Actual length	70m	$L_1+L_2+L_3+L_4+e$
	Piping length of indoor unit which is furthest to the first branch piping L（※）		30m	$L_2+L_3+L_4+e$
Drop height	Drop height between indoor and outdoor unit H	Up outdoor	30m	————
		Under outdoor	20m	————
	Drop height between indoor units h		10m	————

4. Pipes connecting the outdoor and indoor units must be blown clean.
Compressed air is used to remove all foreign articles from the inside of pipes. Compared with R22,407C refrigerant is more likely to be affected by moisture, oxides, dust and grease. Special care Hould be taken to avoid contamination from these materials in the pipes. The following process should be used for pipe cleaning.

Adding R407C refrigerant

• Refrigerant must be added in liquid state. • Refrigerant bottles with or without a siphon tube canbe refilled with refrigerant upright or respectively.	• Containers for R407C refrigerant must be marked with R407C and a brown stripe. • Filled with refrigerant upright or upside down, R407C and R22 refrigerants can not share the same instrument distributor and filling pipes.

1) Relief valve on the Nitrogen bottle
(Gaseous refrigerant may condense, and oxygen and inflammable gas may cause explosions.)

Warning
Using Oxygen and/or inflammable or toxic gas is prohibited

2) Connect the outdoor unit gas pipes and liquid pipes to the low and high pressure joints on the instrument distributor.

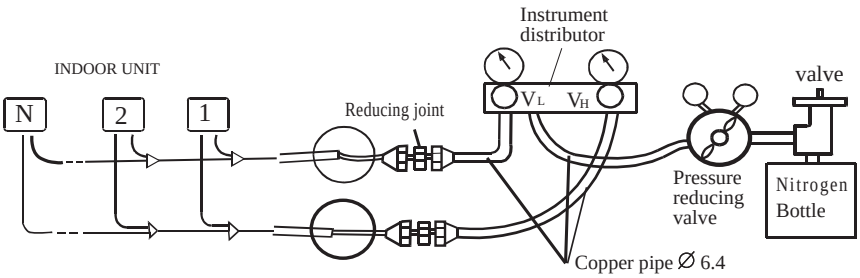

3) While cleaning the indoor unit, all other pipes on the sides of the indoor unit should be fitted with plugs.

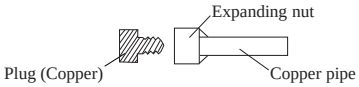

Все каталоги и инструкции здесь: http://splitoff.ru/tehn-doc.html

4) Turn on the Nitrogen bottle valve, ensuring that air outlet pressure at the pressure reducing valve increases to 0.5Mpa(5kg/cm2g), and then turn on the valve which connects the gas side Pipes to and the instrument distributor.

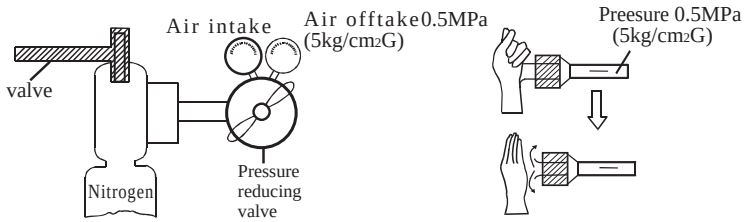

5) Block up at the end of an indoor unit gas pipe by hand. When the pressure inside the gas pipe is at the required pressure for cleaning, remove the hand swiftly to allow the air to escape from inside the pipe. Then repeat the process until the pipe is clean. (Place a piece of gauze at the end of the pipe to confirm that all foreign articles and water have been removed.Cleaning can cease when no foreign bodies are wisible on the gauze.)

6) Turn off the instrument distributor and repeat the operation cycle for the next indoor unit.When all gas pipes are finished,turn off the instrument distributor,and then turn on the valve which connects lipuid pipes to the instrument distributor to clean the liquid pipes using the same method as for the gas pipes.

Air tightness test

- Air tightness test should be carried out after refrigerant piping completes.
- Air tightness test uses nitrogen tanker to pressurize as shown below.
  Valves of both gas and liquid should be closed off. In order to prevent nitrogen into recycle system of outdoor unit, make sure valve handle is tightened. (Both sides of gas and liquid)Pressurize to each refrigeration system should be slow ste
-

Notice
It is absolutely forbidden to use oxygen, inflammable gas or harmful gas to do air tightness test.

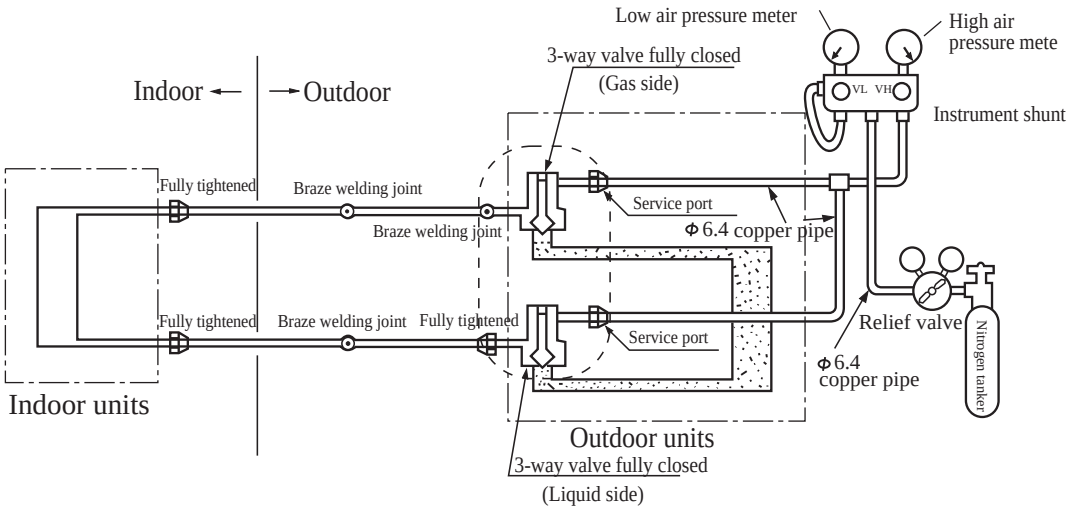

Step 1: 0.3MPa(3.0kg/cm2g) Pressurize more than three minutes.
Step 2: 1.5MPa(15kg/cm2g) Pressurize more than three minutes.----- Find out serious leakage.
Step 3: 3.0MPa(30kg/cm2g) Pressurize about 24 hours.----- Find out slight leakage.

Все каталоги и инструкции здесь: http://splitoff.ru/tehn-doc.html

Installation Procedures

- Test if pressure descends.

  No descend —— Passing
  Pressure descends —— Check leaking point

- When the temperature has a 1* difference, a variety of 0.01Mpa(0.1Kg/cm2g) will occur. Modification is necessary when testing.

- Leakage point check

  In condition of pressure descend when doing test step 1-3, check leakage at each joint by listening, touching and using soap water to find out the leakage point. Weld or tighten the part union again.

Air purge

- Use vacuum pump to purge air. It is absolutely forbidden to use refrigerant to purge air of the unit.
- After air tightness teat, then purge nitrogen and close off the instrument shunt valve. Connect vacuum pump as shown in Fig.
- Air purge must be operated from gas and liquid sides.

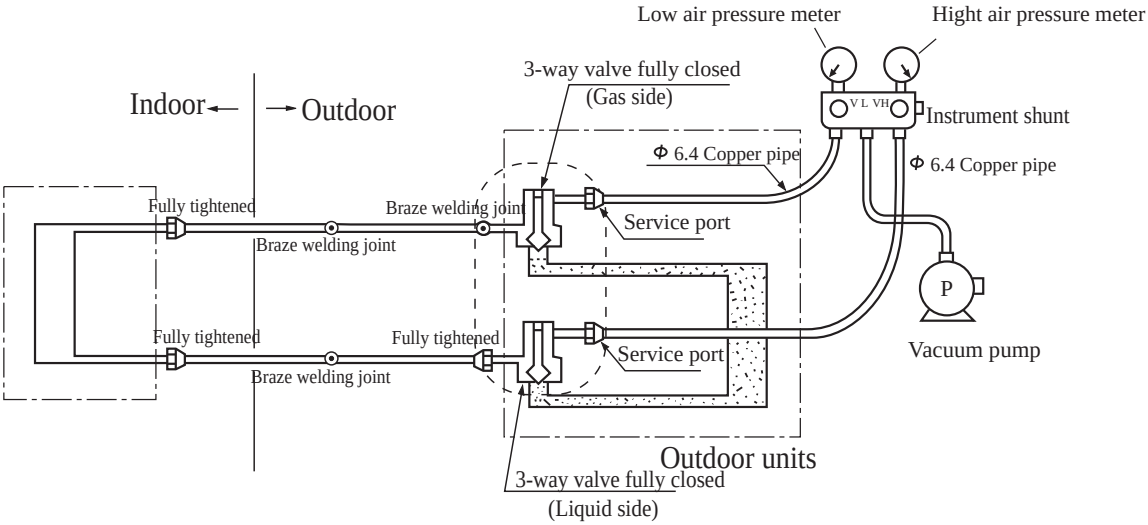

- It is advisable to use a high degree (Below 755mmHg) and larger capacity (Above 40L/minute) vacuum.

  The time needed to purge air is relative to the length of piping, commonly 2-3 hours. Make sure 3-way valves ofgas and li

  If vacuum degree is less than -755mmHg after 2 hours, one more hour's purge could be taken.

- But if vacuum degree is still less than -755mmHg after 3 hours' purge, leakage test is necessary to find out the leakage point then repair it.

- If vacuum degree reaches -755mmHg after more than 2 hours, close off the valves VL,VH of instrument shunt and stop purging. After one hour, make sure no vacuum degree change exists. If there is a chance, it means leakage point exists. Check and repair the leakage point.

  After the above air purge, replace the vacuum pump with refrigerant pump to charge refrigerant.

-

Все каталоги и инструкции здесь: http://splitoff.ru/tehn-doc.html

Refrigerant charge

After air purge, replace the vacuum pump with refrigerant pump to charge refrigerant.
Calculation of refrigerant charge amount
Refrigerant precharged at factory does not include the amount necessary for field using.
The amount necessary for charging piping is according to the calculation result.

Additional charge amount is according to the piping diameter and length in job site to calculate.

Refrigerant charge amount at filed = Actual length of liquid piping X Additional charge amount per 1m in liquid piping.

The formula for Convertible Type and Cassette Type and Cabinet Type Indoor unit :

For example: Additional charge amount R(kg)=(L1x0.030kg/m)+(L2x0.065kg/m)+...

L1— ∅ 6.35 Actual length of liquid piping;
L2— ∅ 9.52 Actual length of liquid piping;

Diameter of liquid piping	Additional charge amount of refrigerant per 1m
∅ 6.35	0.030kg
∅ 9.52	0.065kg
∅ 12.7	0.120kg

The formula for Wall mounted Type and Ceiling concealed Type Indoor unit :

For example: Additional charge amount R(kg)
=(L1x0.030kg/m)+(L2x0.065kg/m)+(L3x0.120kg/m)+(L4x0.016kg/m)+(L5x0.035kg/m)

L1— ∅ 6.35 Actual length of liquid piping(From outdoor unit to Electronic Expansion Valve Assembly);
L2— ∅ 9.52 Actual length of liquid piping(From outdoor unit to Electronic Expansion Valve Assembly);
L3— ∅ 12.7 Actual length of liquid piping(From outdoor unit to Electronic Expansion Valve Assembly);
L4— ∅ 6.35 Actual length of liquid piping(From electronic Expansion Valve Assembly to indoor unit);
L5— ∅ 9.52 Actual length of liquid piping(From electronic Expansion Valve Assembly to indoor unit);

Additional refrigerant charge

- Input refrigerant through service port of gas and liquid side.
- In case of failing to fill up prescribed weight of refrigerant, open all of gas and liquid valves, then close the gas valve a bit. Turn on the compressor and input refrigerant from the service port of the gas side. Use gas cylinder to regulate the flow of refrigerant to enable gasification when sucked by system.
- In case of refrigerant leakage and refrigerant insufficiency, refrigerant can be recover from the system and fill up prescribed weight of refrigerant again.

Valve opening

- Open all the valves of outdoor unit.

Piping insulation

- Insulate gas and liquid piping separately.
- Heat resisting of insulation material of gas piping should be above 120℃

Все каталоги и инструкции здесь: http://splitoff.ru/tehn-doc.html

Electrical wiring

- The air conditioner must use special power supply line.Electric wiring should be conducted by authorized personnel. Fixed w
- Ground wire and fire wire should be strictly separated. It is wrong to connect them together.
  A circuit breaker is necessary when an air conditioner must be installed.
- Depending on the place of installation, a circuit breaker may be necessary.
- Only use copper conductor as electric wire. When conducting wiring, power wire and communication wire can
- use the same threading pipe. It may cause signal trouble so the air conditioner cannot operate properly.
- Power supply: connecting from outside.
  Connecting type is Y. If the flexible wire is damaged, it could be only replaced by manufacturer, maintenance service
- or authorized personnel.
-

Specification for selecting wiring and circuit breaker in job site:

Parameter Item / Type	Power supply	Power wire	Power wire (connecting to unit)	Signal wire (connecting to unit)	Short circuit protector
Spec.	---------	H05RN-F	H05RN-F	Shielding wire	---------
AU242FHBHA AU282FHAHA AU242FHBIA AU282FHAIA AU342FHAIA	1PH, 220-230V~,50Hz	3 x 6mm2	3x(1~1.5mm2)	2x(0.5~1mm2)	30A
AU482FIAIA AU482FIBIA AU522FIAIA AU522FIAKA	1PH, 220-230V~,50Hz	3 x 16mm2	3x(1~1.5mm2)	2x(0.5~1mm2)	75A
AU48NFIAIA AU48NFIBJA AU48NFIBIA AU52NFIAKA AU55NFIAIA AU60NFIAKA	3N~, 380-400V,50Hz	H07RN-F 5 G 4mm2	3x(1~1.5mm2)	2x(0.5~1mm2)	20A

Notice: In keeping the maximal running circuit, the voltage drop of the power wire is less than 2% of rated voltage.

Connecting method

1. Connecting method of annular terminal

For the connecting wiring with an annular end, connecting method of wiring is shown right in figure. Detach the screw of connecting wire, let screw pass through the annular of the end of connecting wiring, then connect the screw to terminal row and tighten it.

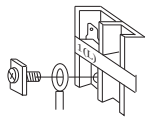

Connecting method of Annular terminal

2. Connecting method of straight terminalFor the connecting wiring with a non-annular end, connecting method of wiring is: Detac the screw. Pull the wire slightly out to make sure its tightness.

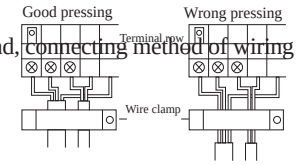

3. Connecting method without terminals

Connect the electric wiringwith the same diameter toboth sides of connectingwiring terminal.

Do not connect theelectric wiring with the same diameter to each other.

Do not connect the electric wiring with different diameter.

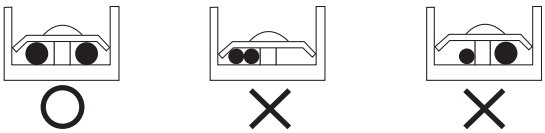

Connecting method for the power supply is 1PH.220-230V~ .50Hz

When installing several sets of air conditioner, the power wire of air conditions should connect to different phase of three-phase electric and distribute equally as far as possible.Otherwise it may cause ex

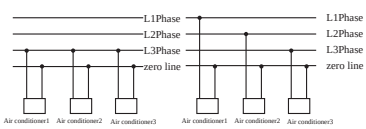

Wire pressing method of power wire and connecting wire

After connecting wire, it is necessary to use wire clamp to press the power wire and connecting wire closely. Be careful to press on the outside of the connecting wire. As shown in right figure above

Notice:

When connecting wiring from indoor and outdoor, check the number on the terminal of indoor and outdoor wiring. Use one wire to connect terminals with same number and color. Wrong connection may cause air conditioner controller damage or system malfunction.

Connecting method for the power supply is 3N~.380-400V .50Hz

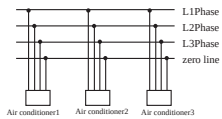

Все каталоги и инструкции здесь: http://splitoff.ru/tehn-doc.html

Method of outdoor unit wiring

- Power wire (connecting from outdoor unit)
  Remove service panel of outdoor unit and loosen wire clamp A. Then let fire wire, zero wire and ground wire pass through clamp A and connect to terminal row correspondingly. After connecting, press clamp A to its original status.
  Power wire of indoor unit, communicating wire
- Loosen wire clamp B. Then let Power wire of indoor unit and communicating wire pass through clamp B and connect to corresponding terminal row. After connecting, press clamp B to its original status.
  Notice: Power wire, power connecting wire and communicating wire shall be field supplied.

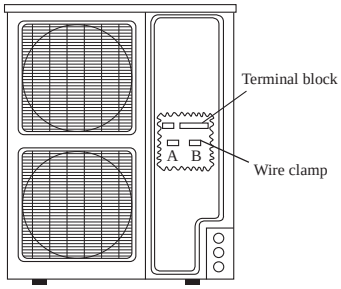

Method of indoor unit wiring

※ Power wire, communicating wire of indoor unit

- Loosen wire board and connect power wire and communicating wire to corresponding terminal row.
- Ground method of shielded layer of communicating wire is shown as below (Fig.)

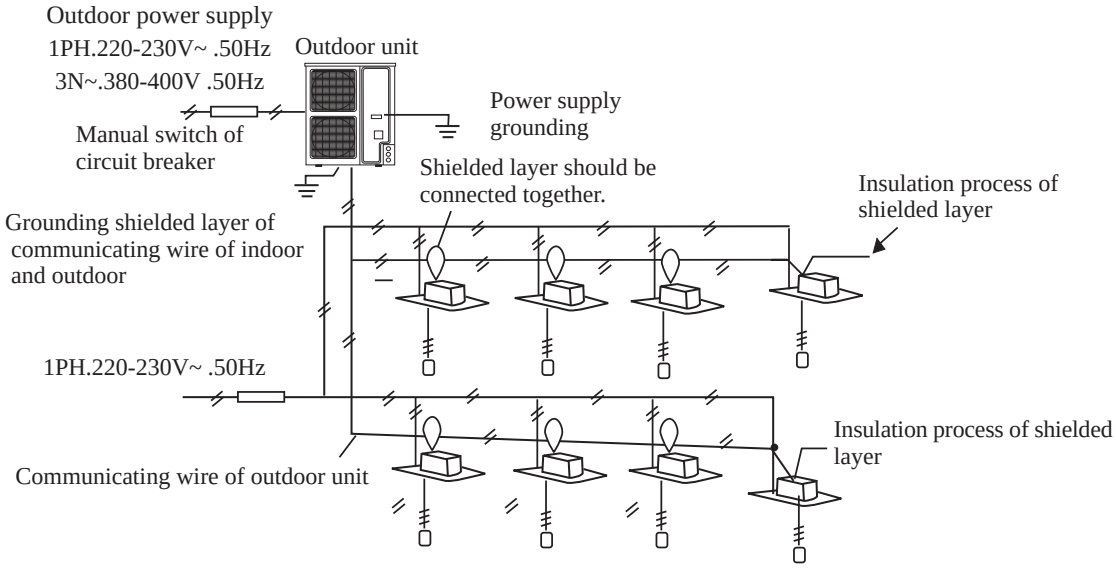

Все каталоги и инструкции здесь: http://splitoff.ru/tehn-doc.html

Notice:

When connecting power wire to terminal row, please notice following precaution.
1.Please do not connect power wires with different dimension to the same connecting terminal.
loose contact may cause heat generation.
2.Please do not connect with different dimension to the same grounding terminal.
loose contact may influence protection.
3.Keeping a proper distance between communication wire and power wire, otherwise it may cause
abnormal communication because of disturbance.4.Do not connect power wires to communicating wire's connecting terminal. Th
if connecting mistakes exist.

Example figure of wiring
Model: Outdoor
AU482~522

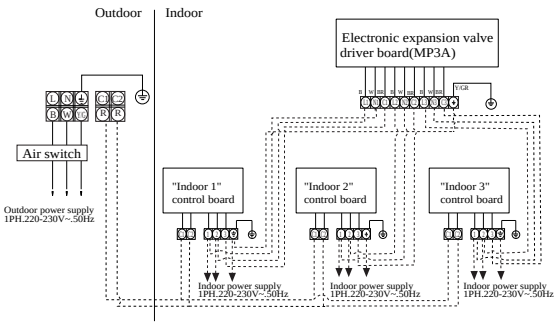

Example figure of wiring
Model: Outdoor
AU48N~60N

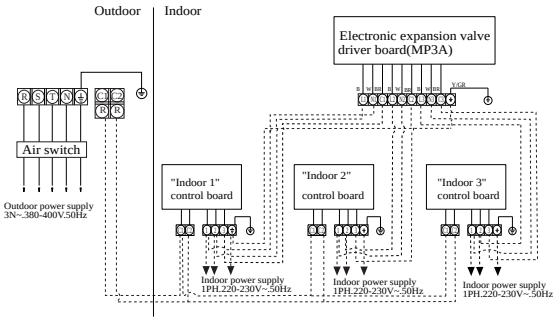

Example figure of wiring
Model: Outdoor
AU242~342
NOTE: 1. Ceiling concealed type must be connected MP2A or MP3A (TES indoor units not included).
2. Connect method of MP3A is follwing

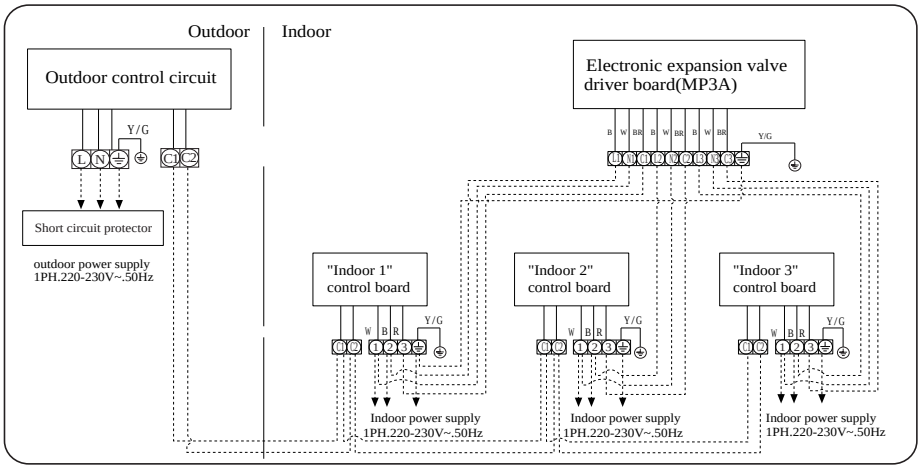

NOTE
1.The power supply and communication wiring of indoor electronic expansion valve must be connected with their corresponding indoor unit.And their phase sequence must correspond with the remarks strictly respectively, or will cause control board of indoor unit and electronic expansion valve box abnormal or damaged.
2.Because the power supply of MP3A control board is joined from "indoor 1","indoor 1" must be always electrified in running mode, or will cause performance abnormal.
3.MP3A wiring and indoor wiring: H05RNF 4 x (1.0-1.5)mm2 ,H05RNF 3x(1.0-1.5)mm2

Все каталоги и инструкции здесь: http://splitoff.ru/tehn-doc.html

Operation and Performance

3 minutes delay function

- Restart soon after stop, the compressor will start to operate after about 3 minutes to protect units.

Cooling and heating operation of H-MRV system

- Indoor units of H-MRV could be controlled separately, but could not cool and heat simultaneously. If cool and heat at the same time, the indoor unit being set latter will be in waiting status and the one being set previously will operate properly.
- When the manager of air conditioner lock the mode in cooling or heating, other operations cannot be execute.

Heating feature

- If outdoor temperature turns higher when operating, blower fan of the indoor unit will run in low speed or stop. For Ceiling concealed Type indoor unit,Setting the 4-position dial switch to adjust fan speed level on the control board of the indoor unit.

Defrosting of heating mode

- When outdoor unit frosting during heating, defrosting will run automatically in order to increasing heating effect (2-3 minutes). Outdoor unit will exclude condensed water at this point.
- The blower fan of indoor unit will run in low speed or stop and outdoor unit's will stop during defrosting.

Adaptive situation of the air conditioning

- Please operate the air conditioner in adaptive situation in order proper use.If operate the air conditioner out of adaptivesituation, Relative humidity below 80%Running a long time in environment with relative humidity above 80%, condensed water may fal
-

Protecting device (high and low pressure switch)

Protecting device is the device which can stop the air conditioner automatically when air conditioner runs improperly. When protecting device acts on, cooling and heating stop with the indicator of wire controller still lighting. When protecting device is act on, wire controller shows malfunction code.

Protecting device activates in following situations

In cooling:
- Outlet and inlet of outdoor unit is occluded.
- Direct strong wind blows towards the outlet.

In heating
- There are dusts attaching on the filter screen of the indoor unit.
- The outlet of indoor unit is occluded.

When protecting device activates on, cut off power supply. Restart after check out the cause.

About power cut off

- All operation will stop when power cuts.
- Press "ON/OFF" button to restart.

Acting error when operating

When acting error takes place during operating because of disturbance from thunder, cars and wireless, cut off power supply. Connect again then press "ON/OFF" button.

About heating capacity

- Heating adopts heat pump type that absorbs heat from outdoor and release to indoor. So if outdoor temperature decreases, heat capacity will decrease.
- Use other heating implement in company with the air conditioner when outdoor temperature is low.
- For details refer to operation instructions of indoor unit.

Все каталоги и инструкции здесь: http://splitoff.ru/tehn-doc.html

Others and Test Run

1. Marks for connecting units

When install multi-air condition system, in order to make clear of the connecting relation between outdoor unit and each indoor unit, make a table on cover of electric box to indicate names of each indoor unit connected. (As follow)

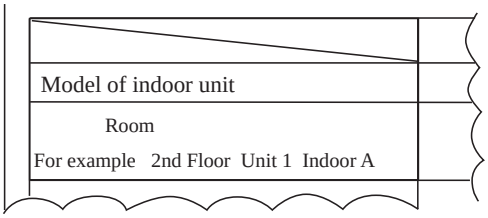

2. Test run

Before test run

- Make sure if the resistor between terminal row (Terminal L, N) of power supply and grounding point is over 1M* by using mega-ohmmeter (500v) before switch on.
  If less than 1M* , operation cannot be executed.
- Switch on outdoor unit. Electrify the shell body of the compressor. In order to protect the compressor, electrify 12 hours before operation.
- It is strictly forbidden to oblige test run with canceling protecting device by hands.
  (Because no work of protect device is very dangerous)

Method of test run

When running test, please refer to instructions of operation and performance simultaneous.
In case of failing to start up in common way because of room temperature, test run can be executed through outdoor unit.

Method of installation and trial run

1. Function explanation of switch SW01, SW02 of control panel of outdoor unit.
   We can know the number of some parameters by using forck board ,but must to connected other frock borad. which is not in the control board.The forck board must be bought from manufacturer.

SW01	SW02	Display of numeral pipe light with seven segments
0	0	Checking code of outdoor unit Display: --- When no checking code When total capacity of indoor units exceeds 130% of rated capacity of outdoor unit, display: F F F
	1	Operation mode of outdoor units: Cooling: -C, Heating: -H , Defrosting: -J
	2	Corrected value of defrosting temperature:display 1---denote L value is 12; display 2---denote L value is 10; display 3---denote L value is 8;
	4	Target of operating frequency of compressor (Decimal number):
	5	Actual operating frequency of compressor (Decimal number):
	6	Indoor units connected (Decimal number):
	7	Sensor backup operating: Sensor TS: 1-, Sensor TE: -1
	8	Sensor backup operating: Sensor TA: 1-, Sensor TC: -1
	9	Sensor backup operating: Sensor PD: 1-, Sensor PS: -1
	13	Corrected value of compressor capacity: Level 4: 0, Level 6: 1
	14	Permission setting of capacity over loading: Permitting: U Not permitting over: d
	15	Format of communicating code: Format1: 01, Format2: H1

Все каталоги и инструкции здесь: http://splitoff.ru/tehn-doc.html

Others and Test Run

SW01	SW02	Display of numeral pipe with seven segments
1	0	Sensor TD Air Discharge value (℃)(decimal number):
	1	Sensor TA Environment timP. value (℃)(decimal number):
	2	Sensor TS Air suction value (℃) (decimal number):
	3	Sensor TE Defrost value (℃)(decimal number):
	4	Sensor TC middle part of Condenser value (℃)(decimal number):
	5	Corresponding saturation temperature of sensor Pd (℃)(decimal number)
	6	Corresponding saturation temperature of sensor Ps (℃)(decimal number)
	7	Opening of outdoor unit PMV1 (decimal number):
	8	Magnet valve SV2: ON: Non 0 OFF: 0
	9	On position of 2-way valve SV1 display ON: -1, OFF: --
	10	Current value of compressor when operating(decimal number)
	11	Blower fan mode of outdoor Low speed: -1 Medium speed:-2 High speed:-3
	12	Status of temperature sensor: ON: -1, OFF: --
	13	On position of 4-way valve display: ON: -1, OFF: --
	14	Force setting of operating mode status: Cooling: -C Heating: -H
2	0	No used
	1	Check fault in the electrical circuit Cooling operation:CC (old code have no)
	2	Check fault in the electrical circuit Heating operation: HH (old code have no)
	3	unification trial run of cooling operation: C (old code have no)
	4	unification trial run of heating operation: H (old code have no)
	5	unification trial run of auto operation: _F (old code have no)
	6	All open/close :open 11/close 00 (after three minutes display--)(old code have no this function)
	7	Function of clean abnormity CL(old code have no)
	8	Opening hand setting of outdoor unit PMV1: All open: FF, All closed: 00
	9	Opening hand setting of outdoor unit PMV2: All open: FF, All closed: 00 (Model AU362FIAIA don't have).
	9	SV2 hand setting of outdoor unit PMV2 of AU362FIAIA: Open: FF, Closed: 00
	10	Opening hand setting of outdoor unit PMV: All open and All closed function All open: FF
	11	Rated operation setting: Rated operation: -F, Common: --
3	0-7	Communicating status of indoor unit: Normal signal receiving: -1, Abnormal signal receiving: --
	8	Display amount of the indoor units ,display 6 denote have six indoor units :
4	0-15	Check code of indoor unit: No check code of indoor unit: --
5	0-15	Indoor unit capacity (Pi): NEW CODE : 0 denote 0.8(pi) ; 1 denote 1(pi) ; 2 denote 1.2(pi)
		3 denote 1.5(pi) ; 4 denote 2(pi) ; 5 denote 2.5(pi)
		6 denote 3(pi) ; 7 denote 4(pi) ;
		OLD CODE : 1 denote 1(pi) ; 7 denote 7(pi)
6	0-15	Required capacity of indoor unit (Decimal number): indoor P-CODE
7	0-15	Opening of indoor unit PMV (Decimal number):
8	0-15	Saturation temperature (℃) of indoor unit (Decimal number) : -26.0~67.0℃
		calculate according to the compressor suction pressure(PS).
9	1-16	Sensor temperature (℃) of indoor unit TA (Decimal number): -26.0~67.0 ℃
10	1-16	Sensor temperature (℃) of indoor unit TC1 (Decimal number): -26.0~100.0 ℃
11	1-16	Sensor temperature (℃) of indoor unit TC2 (Decimal number): -26.0~100.0 ℃
12	1-16	Single unit cooling operation trial run
13	1-16	Single unit heating operation trial run

Notice: Value Pd in cooling mode as well as value Pd in heating mode is of no consequence in AU362FIAIA model.

Все каталоги и инструкции здесь: http://splitoff.ru/tehn-doc.html

Others and Test Run

2. Function explanation of switch SW03 of control panel of outdoor unit.

SW03①	SW03②	Function explanation
OFF	OFF	In general, i.e. indoor units determine the operating mode of outdoor unit.
ON	OFF	Cooling only type
OFF	ON	Heating only type
ON	ON	In general, same as above

3. Function explanation of jumper wire of control panel of outdoor unit

J08	Corrected grade of compressor capacity
YES	Grade 6
NO	Grade 4

J07	Permission setting of capacity over loading of indoor units
YES	Capacity of indoor units could not exceed 130% of rated capacity of outdoor unit. NOTICE: When detecting excess, outdoor unit will stop and give an alarm to indoor units.
NO	Capacity permission of indoor units exceed 130% of rated capacity of outdoor unit

J10	Choose of the capacity of indoor units
YES	FORMAT1 : 0.8 1 1.2 1.5 2 2.5 3 4 (HP)
NO	FORMAT2 (Compatible former indoor units):1 2 3 4 5 6 7 8 (HP)

4. Trial run by switches combination of outdoor unit

Function	Outline	Method of setting and discharging
Setting of rated operation mode of outdoor unit	Let the outdoor unit in rated operation mode by setting the switches on control panel of outdoor unit	[Setting] Set SW01 to 1, SW02 to 11 and press SW04 for over 2 seconds. Nixie light with seven segments displays "FF", setting succeeds. "FF" will keep when operating. [Discharge] Switch off

Abnormal test run

- Turn rotary switches SW01, SW02of control panel to "0", nixie light displays malfunction code. If no malfunctionexists, it dis to according to [Trouble shooting] item of installation specification.

1. Precautions of refrigerant leakage

The air conditioner system uses R22/R407C as its refrigerant which itself is no harm to human body and nonflammablesafety refr critical concentration in case of leakage. Other precautions could be taken also.

✳ Critical concentration is a noxious gas concentration that is not so harmful to personnel but needs to treat urgently.
The critical concentration of R22/R407C is 0.3kg/m3

Все каталоги и инструкции здесь: http://splitoff.ru/tehn-doc.html

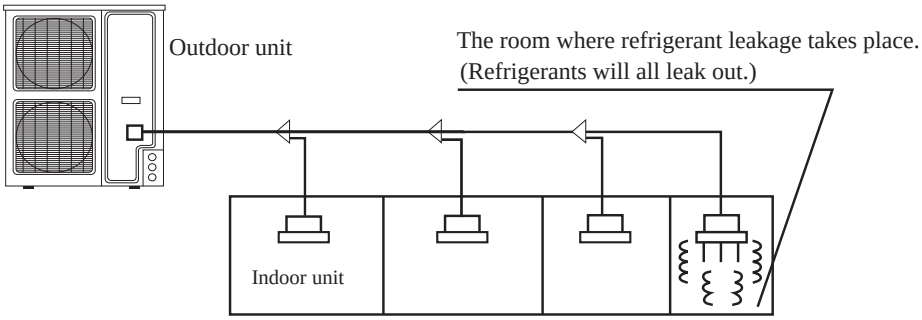

NOTE : (for adding R407C refrigerant)
• Containers for R407C refrigerant must be marked with R407C and a brown Stripe. • R407C and R22 refrigerants cannot share the same instrument distributor and filling pipes.

2. Calculating method of refrigerant concentration

Calculate concentration as follows.

(1) Calculate the total amount of refrigerant of each cooling system(kg) = Refrigerant charge amount of one system of outdoor unit + Additional refrigerant charge amount
Refrigerant charge amount of one system of outdoor unit means: Refrigerant amount when leaving factory
Additional refrigerant charge amount means: Additional refrigerant amount charged according to piping length and piping diameter during site operation.

(2) Calculate space of the smallest room installing indoor unit

(3) Calculate the concentration of refrigerant

$$\frac{\text{Total charge amount of cooling system}}{\text{Space of the smallest room installing indoor unit}} \leqslant \text{Refrigerant concentration} 0.3 (kg/m^3)$$

3. Method of avoiding refrigerant concentration to exceed critical concentration

(1)Open an vent opening
Open vent opening on both top and bottom part of door which connects to outdoor.
Each opening is no less than 0.15% of the room space. Vent opening could also be opened on the wall directly.

(2)Decease charge amount of refrigerant Shorten piping length.
Let indoor unit and outdoor unit nearer to shorten piping length so as to decrease refrigerant amount.
Decrease indoor and outdoor unit capacity
Constitute one outdoor unit with several units.
Then each outdoor unit capacity decreases and refrigerant amount is less.

(3)Set the scavenger fan by oneself
In order to keep refrigerant concentration below critical concentration, user can use the scavenger fan all the while to let in fresh air.
In condition of non-stop scavenging cannot be executed, let scavenger fan correlative to leakage alarm (In case of leaking, scavenger fan works immediately.) (As follow)

Example of scavenging system

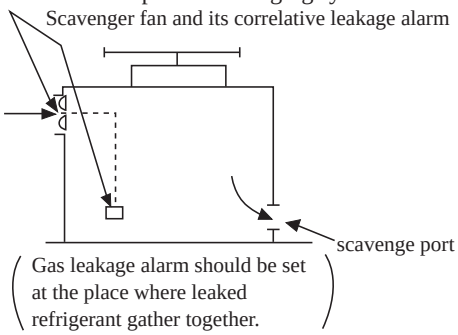

Все каталоги и инструкции здесь: http://splitoff.ru/tehn-doc.html

Malfunction

The nixie light of the outdoor unit control panel displays malfunction code directly when malfunction occurs.(This malfunction t

AU242FHBHA AU282FHAHA AU482~522FIAIA AU482FIBHA AU48NFIAIA
Malfunction code and malfunction confirming

Malfunction code	Malfunction position
1	Circuit TE of defrosting temperature sensor
2	Circuit TA of environment temperature sensor
3	Circuit TS of compressor suction temperature sensor
4	Circuit TD of compressor discharge temperature sensor
5	Circuit TC of condenser middle part temperature sensor
6	Current AC overload
7	Circuit of current transformer
8	Overload protector circuit of frequency conversing compressor
9	Protecting circuit of IPM
10	Internal fault of control panel
11	Protecting action of compressor discharge temperature (TD)
12	Pressure sensor (Pd, Ps) Wrong piping.
13	Pressure switch acting NOTE:For AU522 type is Protecting action of high pressure press.
14	Protecting action of low pressure press (Ps)
15	Protecting action of high pressure press (Pd)
16	Protecting action of compressor suction temperature (TS)
17	Circuit Pd of high-pressure sensor
18	Circuit Ps of low-pressure sensor
19	Protecting action of compressor discharge temperature of low frequency(TD)
20	Internal fault of control panel
21	Internal fault of control panel
22	Communicating fault of indoor and outdoor units
23	Internal fault of control panel

(NOTE:Model AU522FIAIA don't have 15,17,18 malfunction position).

Все каталоги и инструкции здесь: http://splitoff.ru/tehn-doc.html

Malfunction

The nixie light of the outdoor unit control panel displays malfunction code directly when malfunction occurs.
(This malfunction table only applies to the follow models referred in this manual.)

AU242FHBIA AU282FHAIA AU342FHAIA AU482FIBIA AU522FIAKA Malfunction code and malfunction confirming

Malfunction code	Malfunction position
1	Circuit Te of defrosting temperature sensor abnormal
2	Circuit Ta of defrosting temperature sensor abnormal
3	Circuit Ts of defrosting temperature sensor abnormal
4	Circuit Td of defrosting temperature sensor abnormal
5	Circuit Tc of defrosting temperature sensor abnormal
6	Current AC overload
7	Circuit of current transformer abnormal
8	Overload protector acting of compressor
9	IPM abnormal
10	The EEPROM of control panel abnormal
11	Protection action of compressor vent temperature
13	Protection action of high pressure switch
14	Protection action of low pressure switch
16	Protection action of the compressor inhale temperature
19	Protection of compressor vent temperature of low frequency
20	Communication abnormal between MCU 857 and 846
21	Current overload of compressor
22	Communication abnormal between 846 and indoor units
23	The EEPROM of control panel abnormal

Все каталоги и инструкции здесь: http://splitoff.ru/tehn-doc.html

Malfunction

AU48NFIBIA AU55NFIAIA AU52NFIAKA AU60NFIAKA AU48NFIBJA Malfunction confirming and malfunctioncode

When the remote wire controller display E1,check controller board(LED1)of the indoor unit or the contoller board(LED)of the outd

Malfunction description	code	LED display onthe regulating board	If send to indoor unit	Remarks
Normal	0	Normal	YES	
Defrosting temperature sensor abnormal	1	E.4.	YES	Resumable
Ambient temperature sensor abnormal	2	E.1.	YES	Resumable
Suction temperature sensor abnormal	3	E.3.	YES	Resumable
Discharging temperature sensor abnormal	4	E.2.	YES	Resumable
Coil temperature sensor abnormal	5	E.5.	YES	Resumable
Over current Protection	6	O.C.	YES	After there are current malfunction for 3 times in 1 hour, the testing board will display the last abnormal reason P X.X. Need powered off and restart
		P O.C.	No	
Current sensor abnormal	7	C.T.	YES	After trouble shooting, need powered off and restart
Overload Protection	8	O.L.	YES	After there are current malfunction for 3 times in 1 hour, the testing board will display the last abnormal reason P X.X. Need powered off and restart
		P O.L.	No	
IPM protection	9	E.P.	YES	
		P E.P.	No	
Read EEPROM value wrongly	10	P E.E.	No	Need reset and restart
Discharging temperature over high abnormal	11	O.D.	YES	After there are current malfunction for 3 times in half an hour, the testing board will display the last abnormal reason P X.X. Need powered off and restart
		P O.D.	No	
High pressure switch abnormal	12	O.P.	YES	Resumable
Voltage over low protection	13	L.U.	YES	After there are voltage malfunction for 3 times in 1 hour,the testing board will display the last abnormal reason P X.X. Need powered off and restart.
		P. L.U.		
Voltage over high protection	14	O.U.	YES	
		P O.U.		
Low pressure abnormal (AU55NFIAIA)	15	O.H.	YES	
Recover the parameter set when out of factory	16	P I.A.	No	
Clear the malfunction memory	17	P C.T.	No	Need reset and restart
Need reset	18	P R.E.	No	Need reset and restart
Radiator temperature sensor abnormal	----	-------	No use temporarily	Need reset and restart

Все каталоги и инструкции здесь: http://splitoff.ru/tehn-doc.html

Все каталоги и инструкции здесь: http://splitoff.ru/tehn-doc.html

Все каталоги и инструкции здесь: http://splitoff.ru/tehn-doc.html

HAIER GROUP
Qingdao Haier Air Conditioner Electric Co., Ltd.
Address: Haier Garden ,Qianwangang Road , Economic Development Zone,
Qingdao ,Shandong 266500, P.R.China
Web Site: http://www.haier.com

splitoff.ru

Большая библиотека технической документации
http://splitoff.ru/tehn-doc.html
каталоги, инструкции, сервисные мануалы, схемы.